JR0405V 2A SCR

Rev.A.1.1

DESCRIPTION:

The JR0405V SCR with the parallel resistor between Gate and Cathode, R_{GK}=10~80kΩ, are especially recommended for use on straight hair, igniter, anion generator, etc. Package SOT-223 is RoHS compliant.

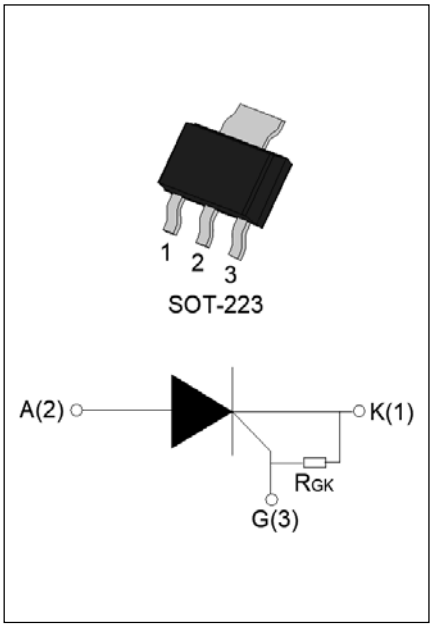

MAIN FEATURES

Symbol	Value	Unit
$I_{T(RMS)}$	2	A
V_{DRM}/V_{RRM}	600	V
I_{GT}	≤200	μA

ABSOLUTE MAXIMUM RATINGS

Parameter	Symbol	Value	Unit
Storage junction temperature range	T_{stg}	-40-150	℃
Operating junction temperature range	T_j	-40-125①	℃
Repetitive peak off-state voltage (T_j=25℃)	V_{DRM}	600	V
Repetitive peak reverse voltage (T_j=25℃)	V_{RRM}	600	V
Average on-state current (T_C≤77℃)	$I_{T(AV)}$	1.3	A
RMS on-state current (T_C≤77℃)	$I_{T(RMS)}$	2	A
Non repetitive surge peak on-state current (t_p=10ms , T_j=25℃)	I_{TSM}	25	A
Non repetitive surge peak on-state current (t_p=8.3ms , T_j=25℃)		28	
I^2t value for fusing (t_p=10ms , T_j=25℃)	I^2t	3.2	A^2s
Critical rate of rise of on-state current (I_G=2×I_{GT} , f=100Hz , T_j=125℃)	dI/dt	50	A/μs
Peak gate current (t_p=20μs, T_j=125℃)	I_{GM}	2	A
Average gate power dissipation (T_j=125℃)	$P_{G(AV)}$	0.5	W

Peak gate power	P_{GM}	5	W
Peak pulse voltage (T_j=25℃; non-repetitive,off-state;FIG.8)	V_{pp}	0.5	kV

NOTE 1: Operating junction temperature T_j is up to 125℃ when a resistor ≤1kΩ is connected between Gate and Cathode. Without this resistor, the T_j is up to 110℃ only.

ELECTRICAL CHARACTERISTICS (T_j=25℃ unless otherwise specified)

Symbol	Test Condition	Value			Unit
		MIN.	TYP.	MAX.	
I_{GT}	V_D=12V R_L=33Ω	-	50	200	μA
V_{GT}		-	0.6	0.8	V
V_{GD}	V_D=V_{DRM} T_j=125℃	0.2	-	-	V
I_L	I_G=1.2 I_{GT}	-	-	6	mA
I_H	I_T=0.1A	-	-	5	mA
dV/dt	V_D=400V T_j=125℃ R_{GK}=1kΩ	50	-	-	V/μs
	V_D=400V T_j=125℃ R_{GK}=220Ω	250	-	-	
t_{on}	I_G=10mA I_A=20mA I_R=2mA T_j=25℃	-	2	-	μs
t_{off}		-	50	-	

STATIC CHARACTERISTICS

Symbol	Parameter		Value(MAX.)	Unit
V_{TM}	I_{TM}=8A t_p=380μs	T_j=25℃	1.6	V
V_{TO}	Threshold voltage	T_j=125℃	0.64	V
R_D	Dynamic resistance	T_j=125℃	0.08	Ω
I_{DRM}	V_D=V_{DRM} V_R=V_{RRM}	T_j=25℃	5	μA
I_{RRM}		T_j=125℃	0.5	mA

THERMAL RESISTANCES

Symbol	Parameter	Value	Unit
$R_{th(j-c)}$	junction to case (DC)	20	℃/W
$R_{th(j-a)}$	junction to ambient (DC)	150	℃/W

ORDERING INFORMATION

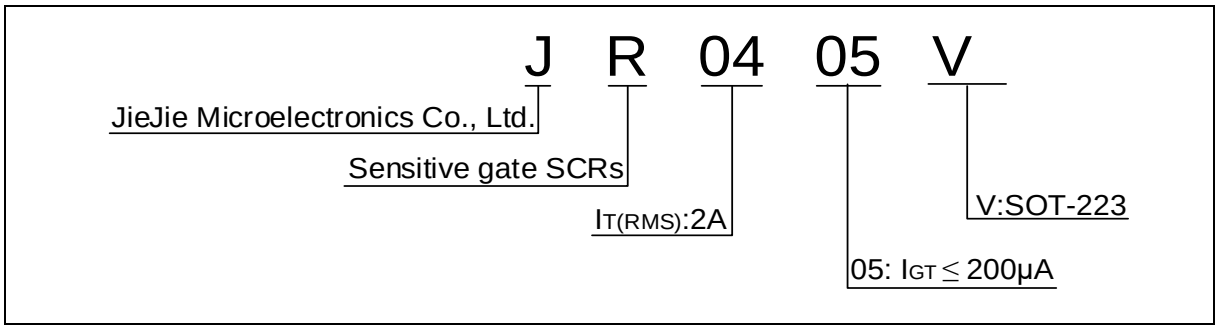

MARKING

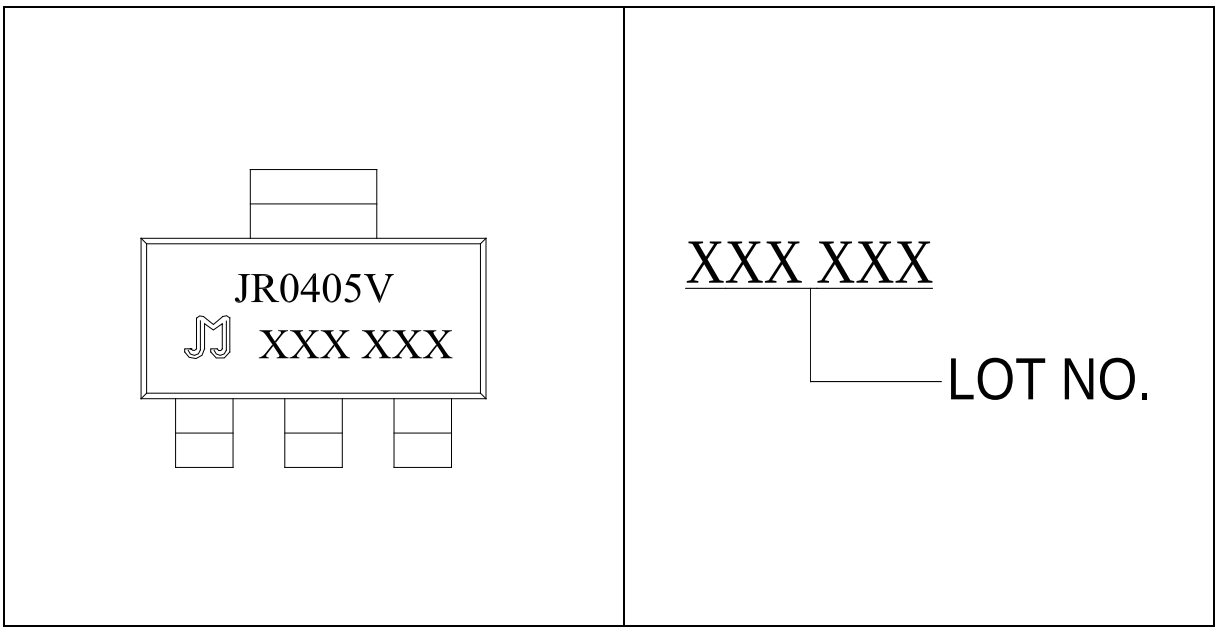

FIG.1: Maximum power dissipation versus RMS on-state current

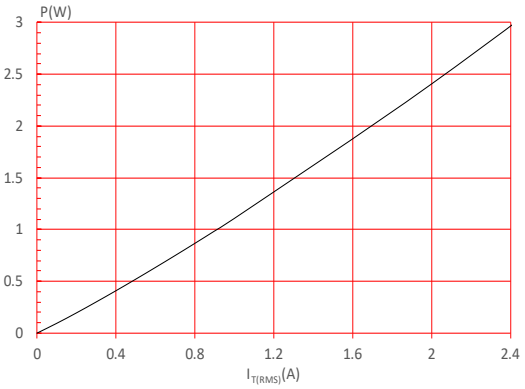

FIG.2: RMS on-state current versus case temperature

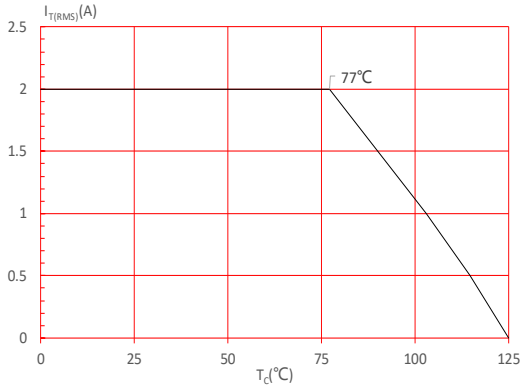

FIG.3: RMS on-state current versus ambient temperature (printed circuit board FR4,copper thickness:35μm)(full cycle)

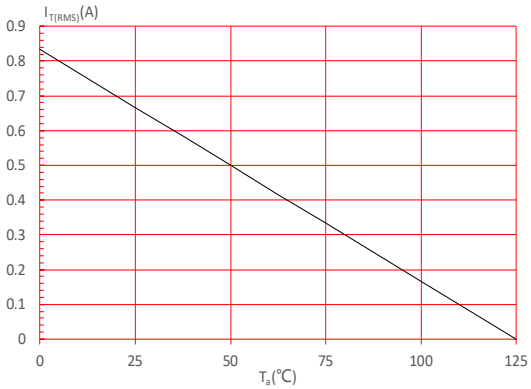

FIG.4: Surge peak on-state current versus number of cycles

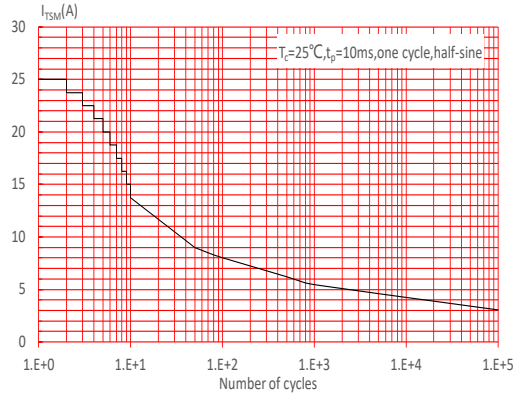

FIG.5: On-state characteristics

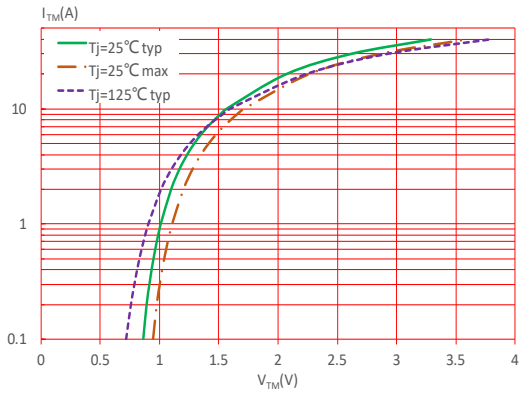

FIG.6: Non-repetitive surge peak on-state current for a sinusoidal pulse with width t_p<10ms, and corresponding value of I^2t (dI/dt<50A/μs)

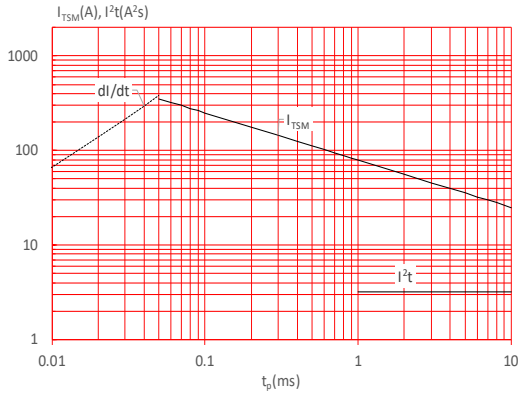

FIG.7: Relative variations of gate trigger current, holding current and latching current versus junction temperature

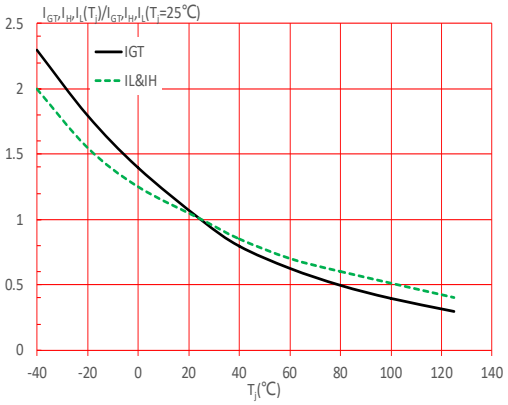

FIG.8：Test circuit for inductive and resistive loads to IEC-61000-4-5 standards

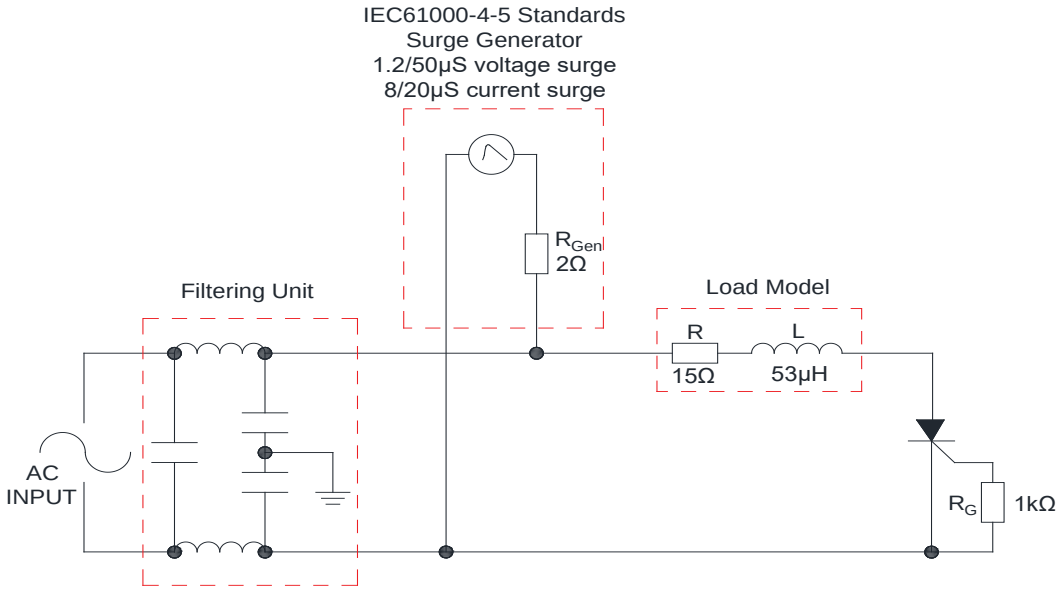

SOLDERING PARAMETERS

Reflow Condition		Pb-Free assembly (see figure at right)
Pre Heat	-Temperature Min ($T_{s(min)}$)	+150℃
	-Temperature Max($T_{s(max)}$)	+200℃
	-Time (Min to Max) (ts)	60-180 secs.
Average ramp up rate (Liquidus Temp (T_L)to peak)		3℃/sec. Max
$T_{s(max)}$ to T_L - Ramp-up Rate		3℃/sec. Max
Reflow	-Temperature(T_L) (Liquidus)	+217℃
	-Temperature(t_L)	60-150 secs.
Peak Temp (T_p)		+260(+0/-5)℃
Time within 5℃of actual Peak Temp (t_p)		20-40secs.
Ramp-down Rate		6℃/sec. Max
Time 25℃ to Peak Temp (T_P)		8 min. Max
Do not exceed		+260℃

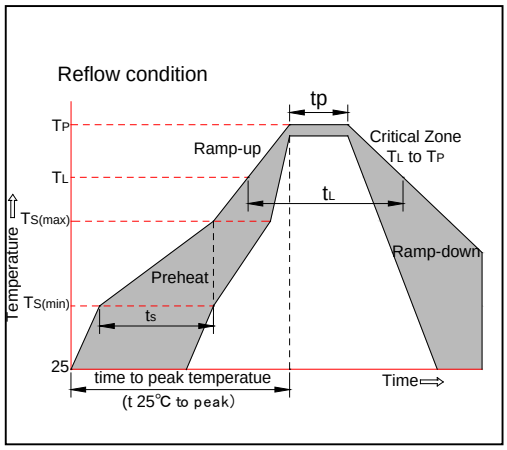

ORDERING INFORMATION

Order code	Voltage V_{DRM}/V_{RRM} (V)	IGT(μA)	Package	Base qty. (pcs)	Delivery mode
JR0405V	600	≤200	SOT-223	4,000	Tape & Reel

Document Revision History

Date	Revision	Changes
Apr.10, 2023	A.1.0	Last update
Oct.23, 2025	A.1.1	Revise PACKAGE MECHANICAL DATA

PACKAGE MECHANICAL DATA

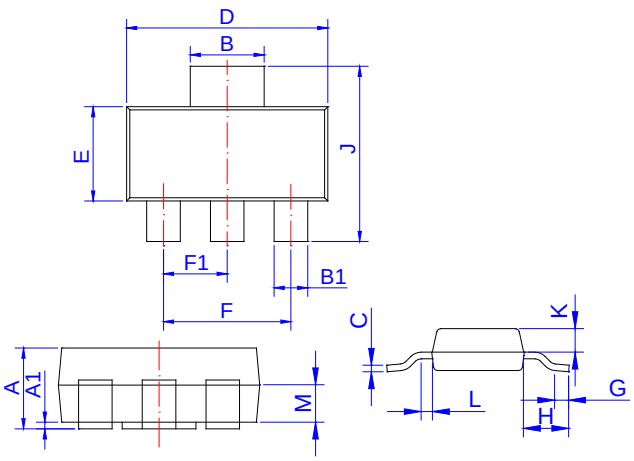

Ref.	Dimensions					
	Millimeters			Inches		
	Min.	Typ.	Max.	Min.	Typ.	Max.
A	1.50	1.60	1.80	0.059	0.063	0.071
A1	0.01	0.06	0.10	0.001	0.002	0.004
B	2.90	3.00	3.10	0.114	0.118	0.122
B1	0.60	0.70	0.80	0.024	0.028	0.031
C	0.22	0.26	0.32	0.009	0.010	0.013
D	6.30	6.50	6.70	0.248	0.256	0.264
E	3.30	3.50	3.70	0.130	0.138	0.146
F	4.40		4.80	0.173		0.189
F1	2.20		2.40	0.087		0.094
G	0.50		1.00	0.020		0.039
H	1.50	1.75	2.00	0.059	0.069	0.079
J	6.70	7.00	7.30	0.264	0.276	0.287
K	0.80		1.00	0.031		0.039
L	0.40		0.80	0.016		0.031
M	0.75		0.95	0.030		0.037

FOOTPRINT-SOT-223 (dimensions in mm)

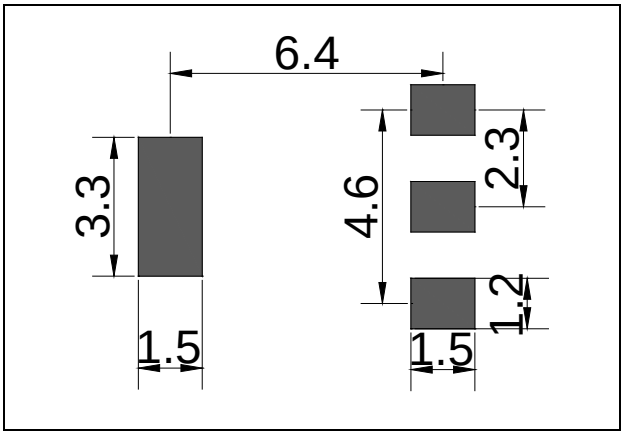

DELIVERY MODE

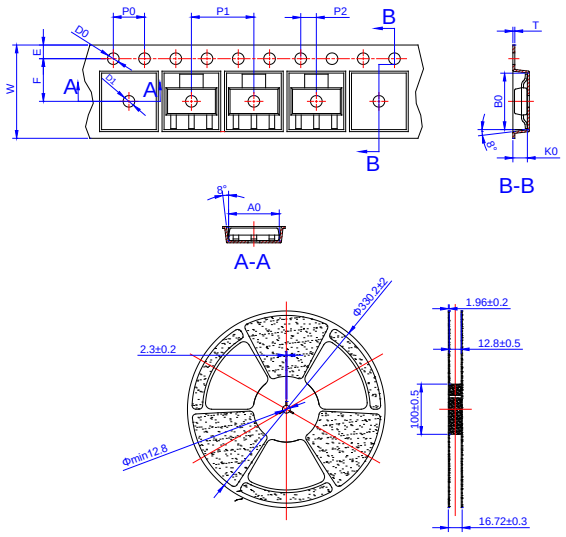

Ref.	Dimensions					
	Millimeters			Inches		
	Min.	Typ.	Max.	Min.	Typ.	Max.
W	-	-	12.30	-		0.482
E	1.65	1.75	1.85	0.065	0.069	0.073
F	5.45	5.50	5.55	0.215	0.217	0.219
D0	1.50	1.55	1.60	0.059	0.061	0.063
D1	1.50	-	-	0.059	-	-
P0	3.90	4.00	4.10	0.154	0.157	0.161
P1	7.90	8.00	8.10	0.311	0.315	0.319
P2	1.95	2.00	2.05	0.077	0.079	0.081
10P0	39.80	40.00	40.20	1.567	1.575	1.583
A0	6.85	6.95	7.05	0.269	0.273	0.276
B0	7.15	7.25	7.35	0.280	0.284	0.288
K0	1.95	2.05	2.15	0.076	0.080	0.084
T	0.20	0.25	0.30	0.008	0.010	0.012

PACKAGE	OUTLINE	REEL (PCS)	PER CARTON (PCS)	TAPE & REEL
SOT-223	TAPING	4,000	40,000	13 inch

Information furnished in this document is believed to be accurate and reliable. However, Jiangsu JieJie Microelectronics Co., Ltd. assumes no responsibility for the consequences of use without consideration for such information nor use beyond it. Information mentioned in this document is subject to change without notice, apart from that when an agreement is signed, Jiangsu JieJie complies with the agreement. Products and information provided in this document have no infringement of patents. Jiangsu JieJie assumes no responsibility for any infringement of other rights of third parties which may result from the use of such products and information. This document supersedes and replaces all information previously supplied.

is a registered trademark of Jiangsu JieJie Microelectronics Co., Ltd.
Copyright © 2025 Jiangsu JieJie Microelectronics Co., Ltd. All rights reserved.